Nauticam
innovation underwater

NA - D7500

Instruction manual

Product number: 17221

FORWARD

Thank you for your purchase of a NAUTICAM housing.

At NAUTICAM, we pride ourselves in the ability to recognise the requirements of professional as well as amateur underwater photographers and fulfill them through the innovative designs of our products. We strive to achieve a high level of user-friendliness by allowing stress-free installation and easy operation of all important functions of the camera.

Each housing is individually inspected and water pressure tested to ensure optimum quality.

Please read this manual carefully before using the housing, this will maximise its performance as well as its lifetime.

The illustrations in this manual may differ from the actual product.

TABLE OF CONTENTS

Warranty 4
Precautions 5
Package Contents 7
Specifications 8
Identification of Parts 9
Opening and Locking the Housing 14
Preparation of the Housing 16
Installing the Camera 22
Shooting Tips 25
Mounting the Port 27
Changing the Viewfinder 30
Care and Maintenance 32
Optional Accessories 33

WARRANTY

All NAUTICAM Products are warranted against any material and manufacturing defects for two years from the date of purchase for consumer use. Please fill in the warranty cards shipped with our housings and viewfinders at the time of sale and return them to your point of purchase within a month. If we do not receive the completed warranty card for a particular product, the warranty period would be assumed to begin from the day that the product is shipped from our facility. This warranty only applies to products purchased from authorised NAUTICAM dealers and does not extend beyond the original retail purchaser.

To return your product for service, please contact your regional authorized service centre(s). Please note that this warranty only applies when the product is purchased in the territory where the service centre is located.

NAUTICAM accepts no liability for any damage to and defects in the housing caused by improper use and/or poor maintenance; it is the responsibility of the owner to carefully follow the instructions in our manuals.

NAUTICAM does not hold responsibility for damage, of any nature, to any equipment used with and/or placed within our products.

NAUTICAM accepts no liability for any loss of captured images or the inability to capture images even if it is due to the malfunctioning of our products.

Unauthorised modifications and/or repairs of our products will automatically invalidate the warranty.

PRECAUTIONS

- A water-tight test without the camera inside the housing is highly recommended when using the system for the first time and after the changing of port and O-ring(s).

- Do not use lubricants from other brands with the silicone rubber O-ring on this housing, only use the lubricant provided by NAUTICAM.

- Discontinue use immediately should you notice any leakage.

- Store the housing in a robust, shock-proof container during transportation; avoid transporting with any equipment, such as a camera, inside the housing.

- When travelling by air, do not close the housing as this may lead to a pressure difference between the atmosphere and inside the housing.

- Care must be taken when opening the housing, as pressure may build up inside the housing which increases the opening force.

- Do not open the product in a wet or sandy environment. Protect the interior from moisture and debris in order to prevent malfunction or leakage.

- Do not store the product in an environment of high humidity.

- Do not leave the housing and the monitor in direct sunlight for prolonged periods.

- Keep out of reach of children, failure to do so could result in injury.

- Defective products should be shipped to our distributors for service, unauthorized disassembling and/or modifications could result in malfunction or leakage.

PACKAGE CONTENTS

- NA-D7500 housing
- Spare silicone rubber O-ring for housing
- O-ring remover
- CR2032 battery
- Lubricant
- Set of Allen keys
- Instruction manual

SPECIFICATIONS

Construction	Housing body:	Aluminium alloy
	Surface treatment:	Hard anodised
	Display window:	Abrasion resistant polycarbonate
Dimensions	Width:	345mm
	Height:	203mm
	Depth:	135mm
Weight	Approx. 3.07kg	
Buoyancy	Slightly negative	
Depth rating	100 metres	
Port mount	N120	
Compatible cameras	Nikon D7500 Camera	

IDENTIFICATION OF PARTS

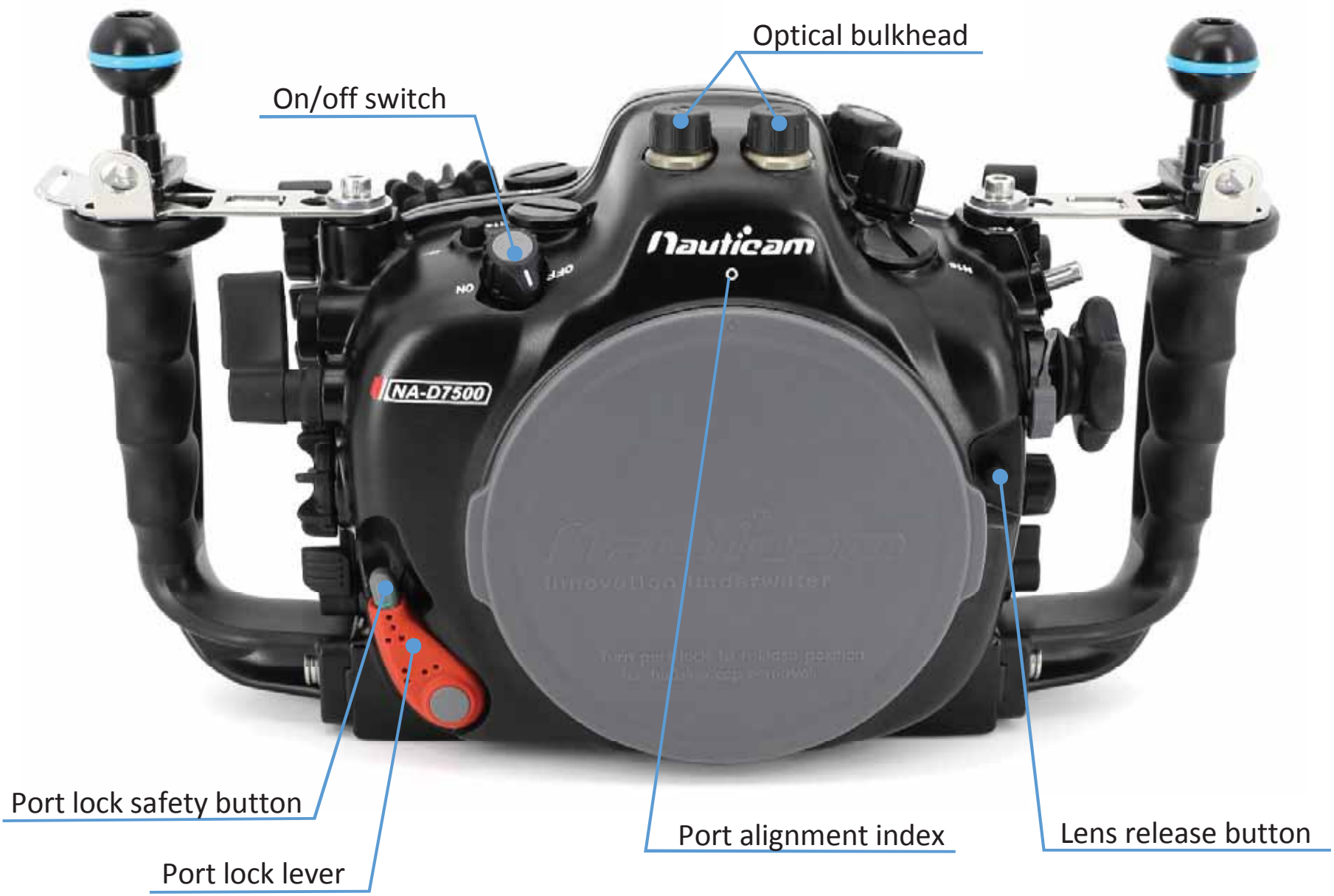

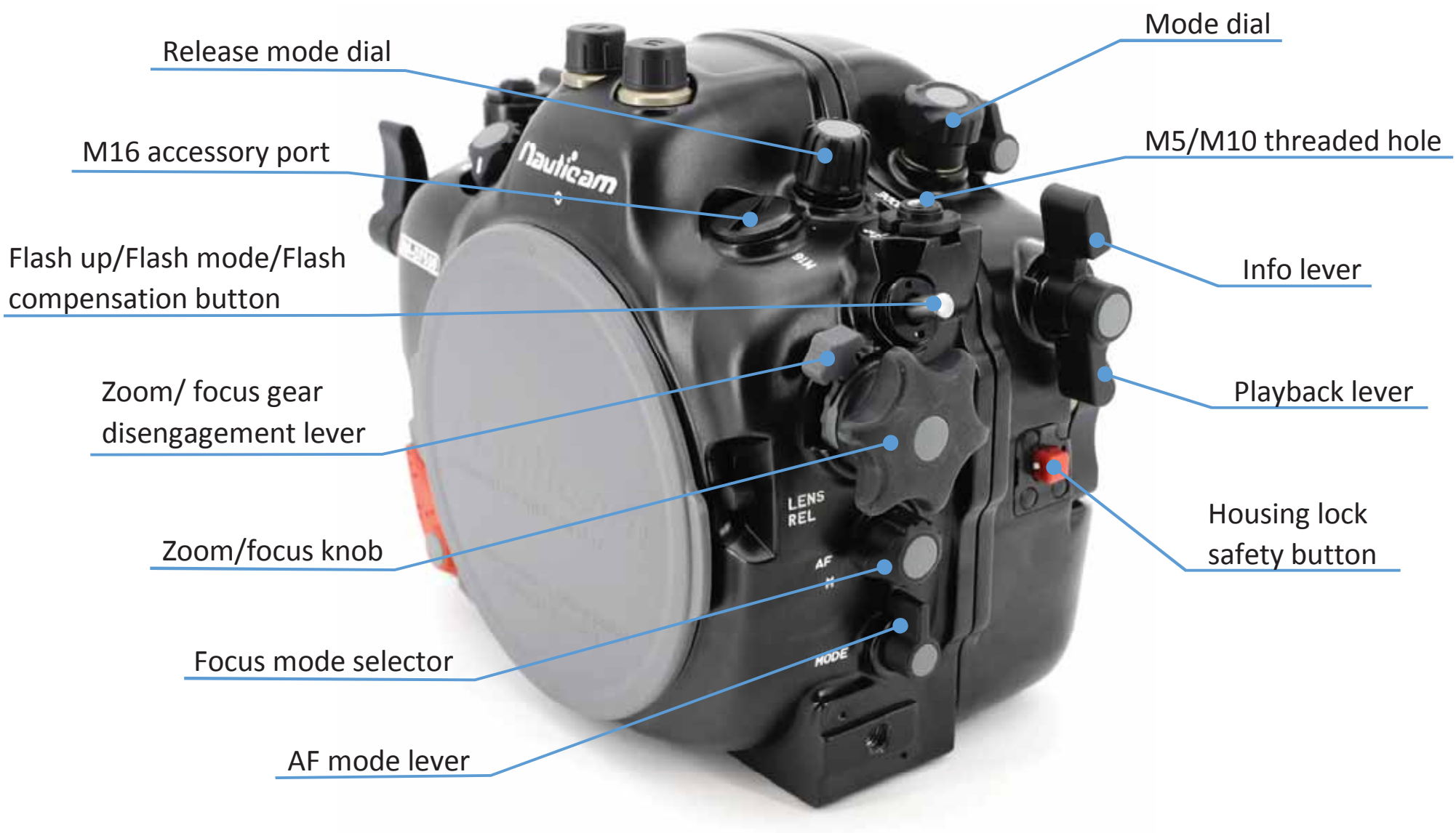

**Handles are not displayed*

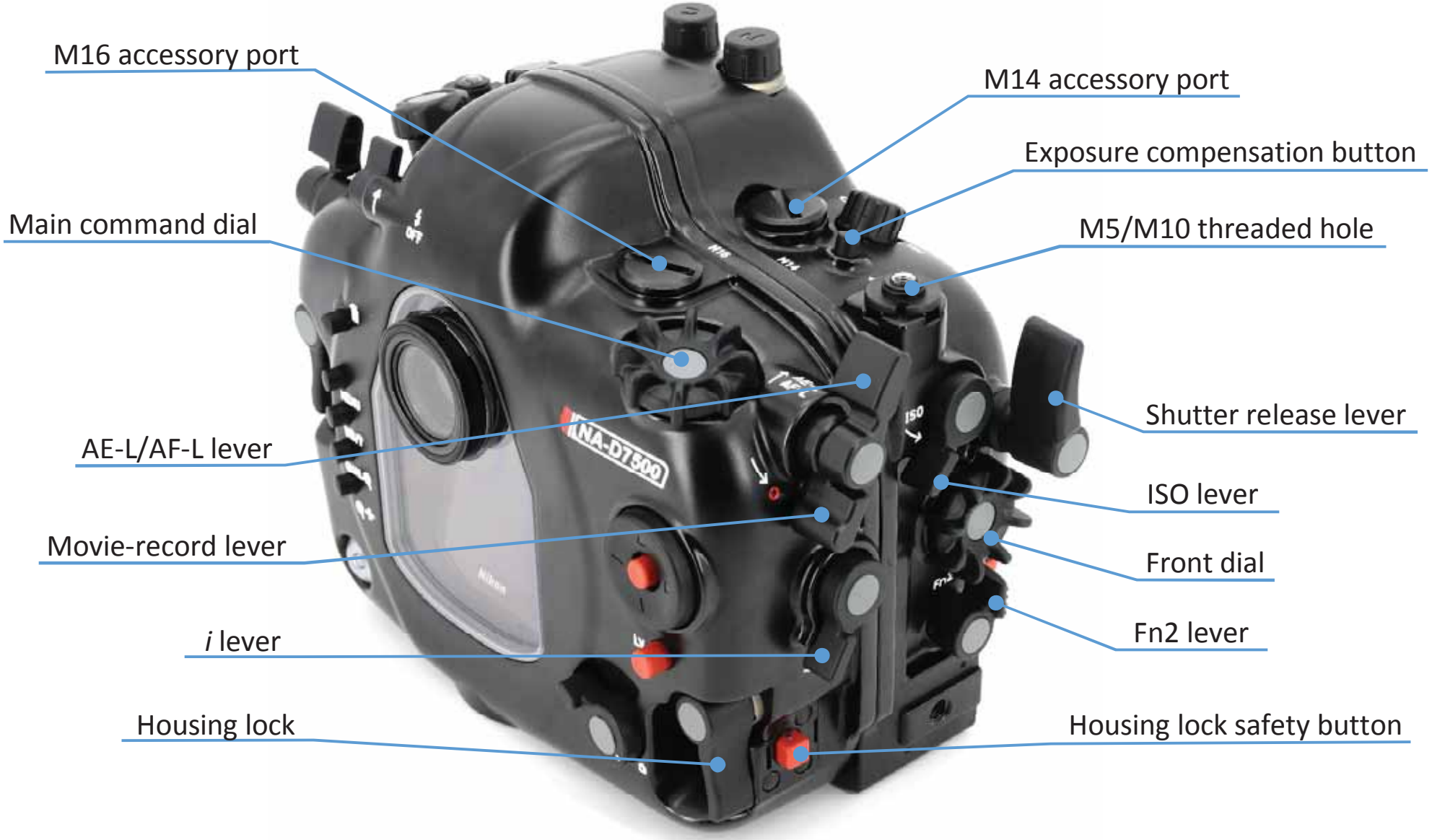

**Handles are not displayed*

**Handles are not displayed*

**The maximum length of screws that can be used with the tripod sockets is 4mm.*

Opening and Locking the Housing

To open the housing:

Always open and close the housing with the front facing down, place the housing on a flat surface or in your lap.

The housing can be opened and closed by operating the two housing locks; when opening, press the safety buttons, then turn the locks outwards.

To lock the housing:

When closing, make sure there is nothing caught between the closing surfaces of the two halves of the housing.

To close, turn the locks towards the housing, and then make sure they are locked in place securely.

PREPARATION OF THE HOUSING

1. After verifying that the main O-ring is in good condition, lightly coat it with the lubricant provided.

2. Make sure the O-ring groove located in the front part of the housing is free from any foreign material; the groove can be cleaned with the aid of a microfiber cloth.

3. Place the main O-ring into the groove, first at the corners, then the whole perimeter.

4. Setting up the moisture alarm:

1. Locate and install the battery provided into the battery compartment on the circuit board inside the housing.

Battery Installation:

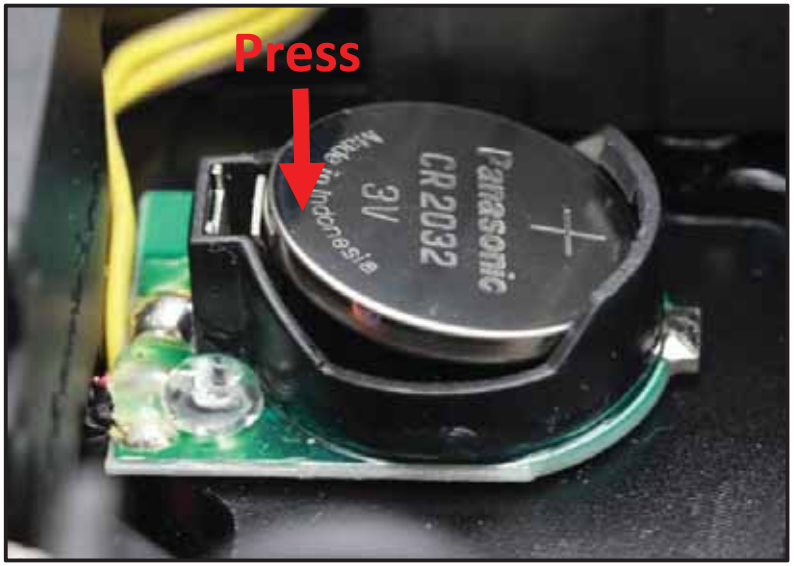

Insert the battery as shown above and then press down the battery.

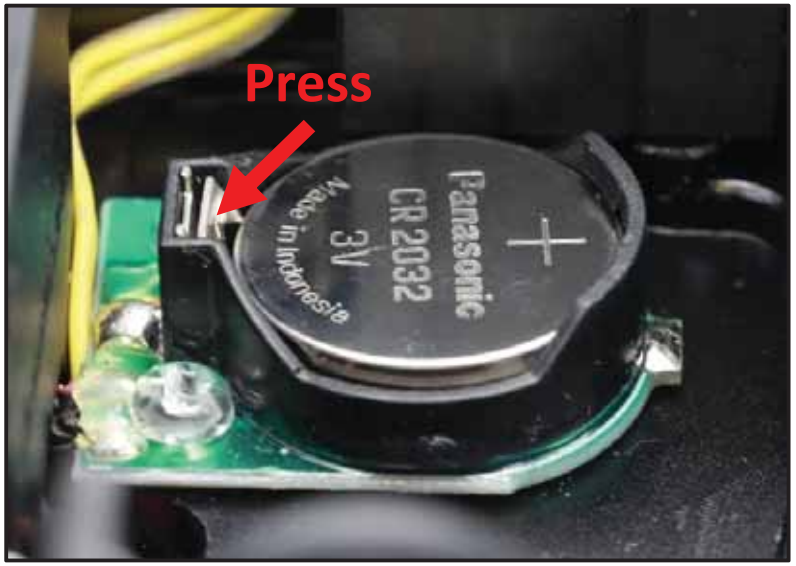

To remove the battery, press the metal plate as indicated and the battery will pop out.

2. Switch the alarm on. The LED light will flash blue once and turn blue for five seconds indicating the battery is normal. Then it goes into flashing blue light standby mode.

3. Test the alarm by connecting the two wires near the bottom of the housing with a damp cotton bud; the alarm should start giving out a repeating “beep” sound along with a flashing red light. The “beep” sound and the light should keep on going for 5 seconds after the removal of the damp cotton bud.

Optional vacuum valve:

Vacuum valve can be attached to the housing via one of the accessory port for conducting a vacuum seal test. Please refer to the manual of the vacuum valve for details of the operation.

LED status identification:

On start up

LED indicator	***Status***
Flash “Blue” light once	Indicates a 2nd generation PCB
Steady "Blue" light	Battery is normal, goes into flashing "Blue" light standby mode after 5 seconds.
"Blue" and "Red" lights alternating	Battery low. Replace battery as soon as possible. Goes into standby mode after 5 seconds.
Steady "Red" light	Battery empty, replace battery.

After start up

LED indicator	***Status***
Flashing "Blue" light	Standby mode. The moisture alarm is active, and the system is ready for vacuum indication whenever a vacuum is detected.
Flashing "Red" light with beeping sound	Moisture is detected.
Flashing "Yellow" light	Some vacuum is detected, target vacuum level is not reached.
Steady "Green" light	Target vacuum level is reached.
Rapidly flash "Yellow" light	Vacuum is dropping. (Will occur only after target vacuum level is reached)
Rapidly flashing "Red" light	Vacuum is totally lost. Circuit stalled until switched off. (Will occur only after target vacuum level is reached)

It is required to reset the vacuum system when the vacuum level is dropped from target level to totally lost. i.e. when opening the housing or changing port.

To reset when changing port/lens:

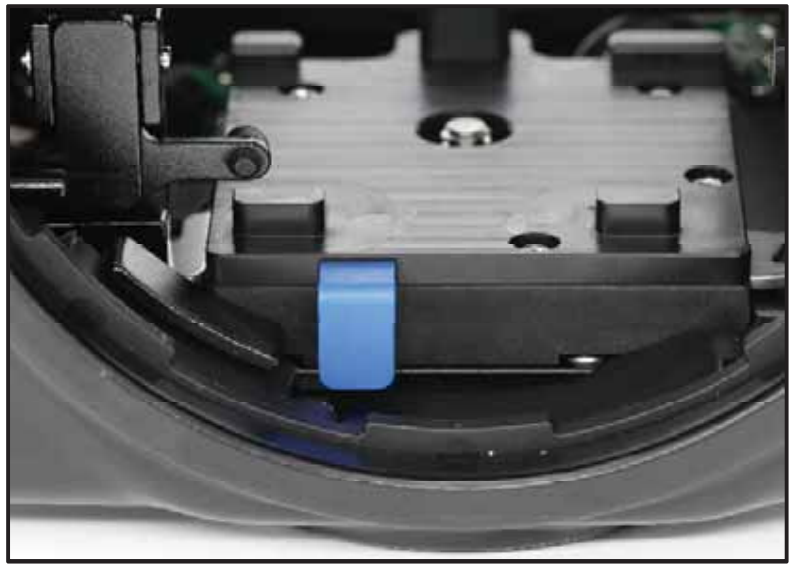

1. Release vacuum.

2. Remove the port and lens from the housing and camera.

3. Press the BLUE button once to reset the system. The LED light will turn blue for five seconds then it goes into flashing blue light standby mode.

INSTALLING THE CAMERA

To install the camera into to the housing:

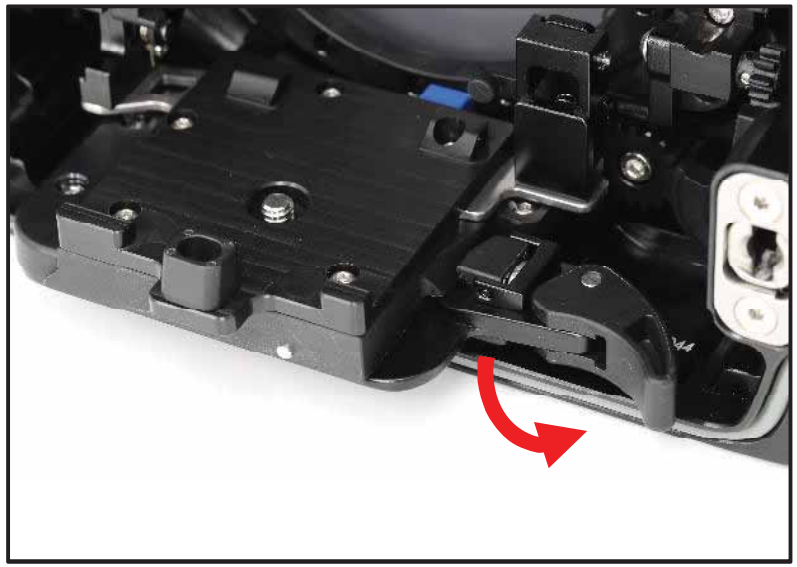

1. Turn the locking lever on the tray of the housing to the “open” position as shown. Then remove the camera saddle from the housing by sliding it outwards.

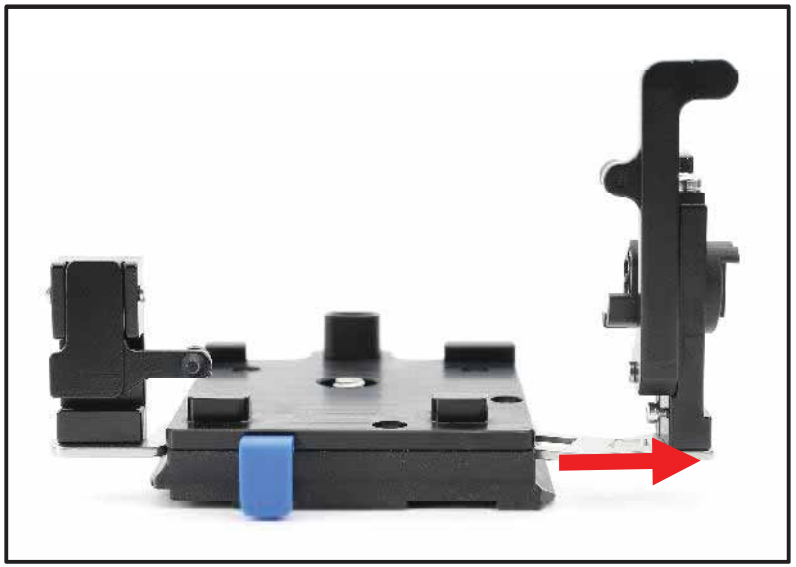

2. Pull the sliding bar on the saddle to its outward position.

3. Tilt the LCD monitor of the camera upwards, then attach the saddle to the camera by tightening the screw to the tripod socket of the camera.

4. After ensuring the AF/MF activator on the sliding bar matches the focus mode selector of the camera, push the sliding bar to its inward position. Check that by rotating the activator, the focus mode of the camera can be altered.

5. If installing the camera with lens and gear attached, Pull down the Zoom/ focus gear disengagement lever before mounting lens (with gears installed) to the camera. Engage the gears by pulling up the lever to the original position. Confirm that the zoom/focus knob operates correctly.

6. Mount the camera by sliding the attached saddle along the rail in the housing until it cannot go in any further.

7. Lock the camera into place by turning the locking lever to the “lock” position as shown. Confirm that all the controls of the housing are correctly engaged.

Release Button to Use Dial

By setting the “Release Button to Use Dial” function of the D7500 camera to **Yes** allows adjustments which are normally made by holding down a button and rotating a command dial to be made by rotating the command dial after the button is pressed and released. E.g. to change ISO, press the ISO lever once and turn the rear dial to adjust the ISO valve.

To enable this function, under Menu, scroll to *Custom Setting Menu* (Pencil shaped icon on the left of the LCD screen), enter ‘f’ *Controls. Then scroll to ‘f4’ Release button to use dial* and enter. Select *‘Yes”* and press OK.

Info Display Auto Off

The eye sensor will automatically turn the information display off when housing is closed. Set the “Info display auto off” option to off will disable the function and display will turn on while the standby timer is active or info button is pressed.

To disable this function, under Menu, scroll to *Setup Menu* (Spanner icon on the left of the LCD screen), go to *Info display auto off* and select *“Off”* and press OK.

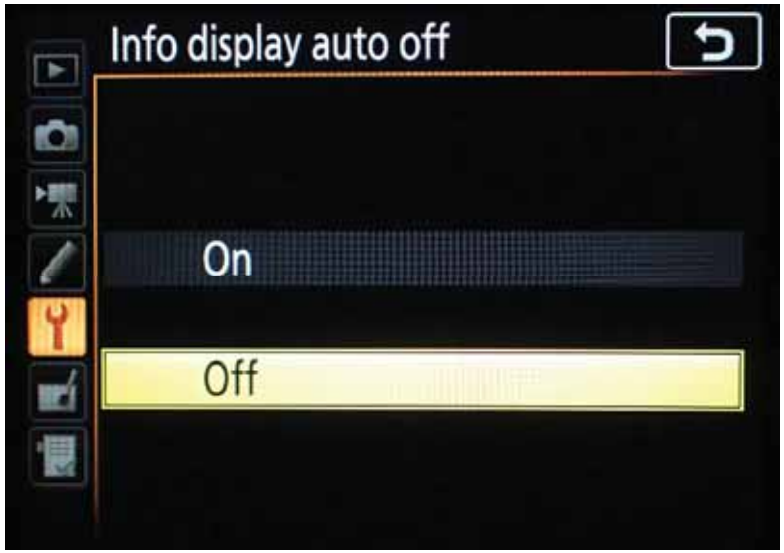

MOUNTING THE PORT

Please refer to the NAUTICAM system port chart for a range of compatible ports:

1. Remove the O-ring from the port, inspect for any damage and lightly coat it with the provided lubricant before placing it back into its groove.

2. Verify that the port opening of the housing is clean and free from foreign material.

3. Push the safety button of the port locking lever downwards.

4. Turn the port locking lever to the release position as shown.

5. Lift housing cap.

6. Align the Port mounting indices of the port and the housing.

7. Gently push the port into the port opening of the housing, until it cannot go in any further.

8. Lock the port into place by turning the port locking lever to the inward position. To ensure that the port is securely mounted, confirm that the green line on the safety button of the port locking lever is visible.

CHANGING THE VIEWFINDER

In order that user can change to a preferred viewfinder easily, the 0.66x viewfinder which comes with the housing is designed so that it can be removed and re-installed by the following simple steps described below.

To remove the viewfinder:

1. Remove the retainer O-ring of the viewfinder inside the rear half of the housing by making use of the recess on the viewfinder.

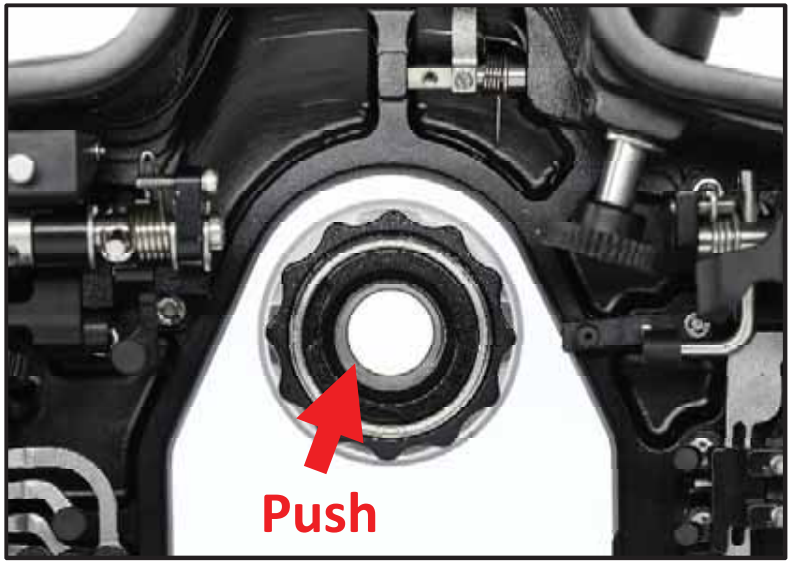

2. Gently push the viewfinder form the inside of the housing.

To re-install the viewfinder:

Lightly coat the O-rings on the outer periphery of the viewfinder body with lubricant.

1. Align the viewfinder with the sleeve in the display window.

2. Push the viewfinder from the outside of the housing until it cannot go in any further.

3. Place the retainer O-ring of the viewfinder back from inside of the housing.

CARE AND MAINTENANCE

- Soak the housing system in fresh water after each salt water use, during which all control buttons/knobs should be operated a few times to avoid the accumulation of salt residue; wipe the housing with a towel before opening.

- Carefully press the housing lock safety button for a few times to avoid the accumulation of salt residue.

- After each day of diving, it is advisable to have the main O-ring in the front part of the housing removed from its groove with the O-ring remover and inspected for damage. Also check that the O-ring retains its original circular shape; never stretch the O-ring excessively or remove it with a sharp object. The O-ring groove should be cleaned to ensure it is free from any salt deposit or foreign material; lightly coat the O-ring with the provided lubricant before reinstalling it in the groove. A damaged O-ring should be discarded immediately and replaced only with one that is provided by NAUTICAM.

- Replace the main O-ring annually. It is recommended that you ship the housing to our distributor for a complete overhaul every year or after every 200 dives.

OPTIONAL ACCESSORIES

P.N. 25625
M16 Vacuum Valve II
(Pushbutton Release)

P.N. 32201
Nauticam 180˚ straight viewfinder

P.N. 32203
Nauticam 45˚ viewfinder

P.N. 26304
Flash trigger for Nikon
(compatible with NA-D7100/D7200/D7500)

NAUTICAM International Limited

Rm2203, CCT Telecom Building,
11 Wo Shing Street, Fotan,
HONG KONG

Web: www.nauticam.com
E-mail: enquiry@nauticam.com
Tel: +852 2690 2711
Fax: +852 2690 9778